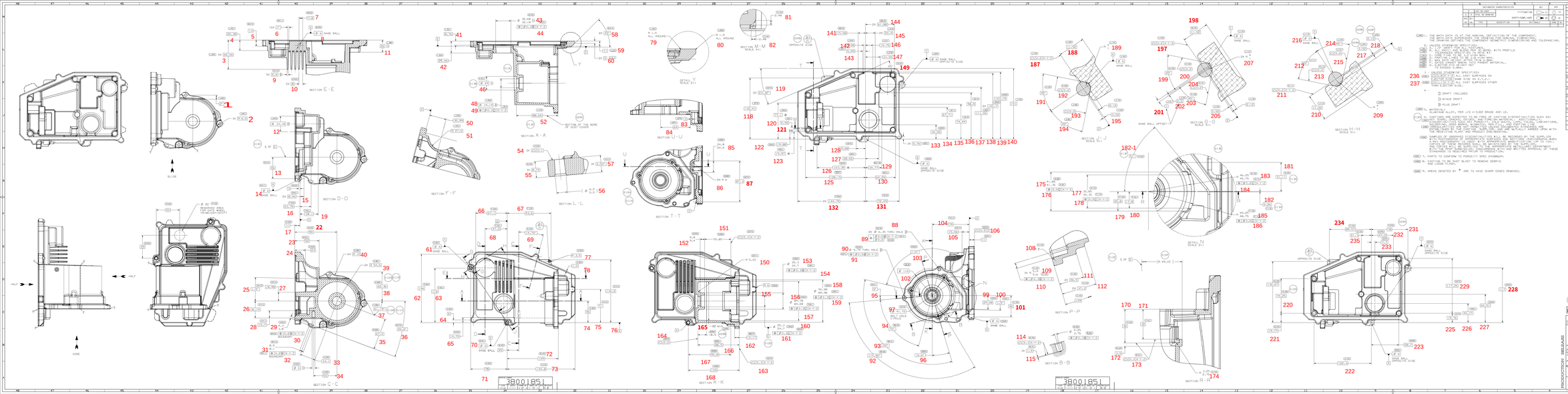

REVISIONS DIMENSIONS IN MILLIMETERS							